Ovo set 13

eumardesign

280-002-13

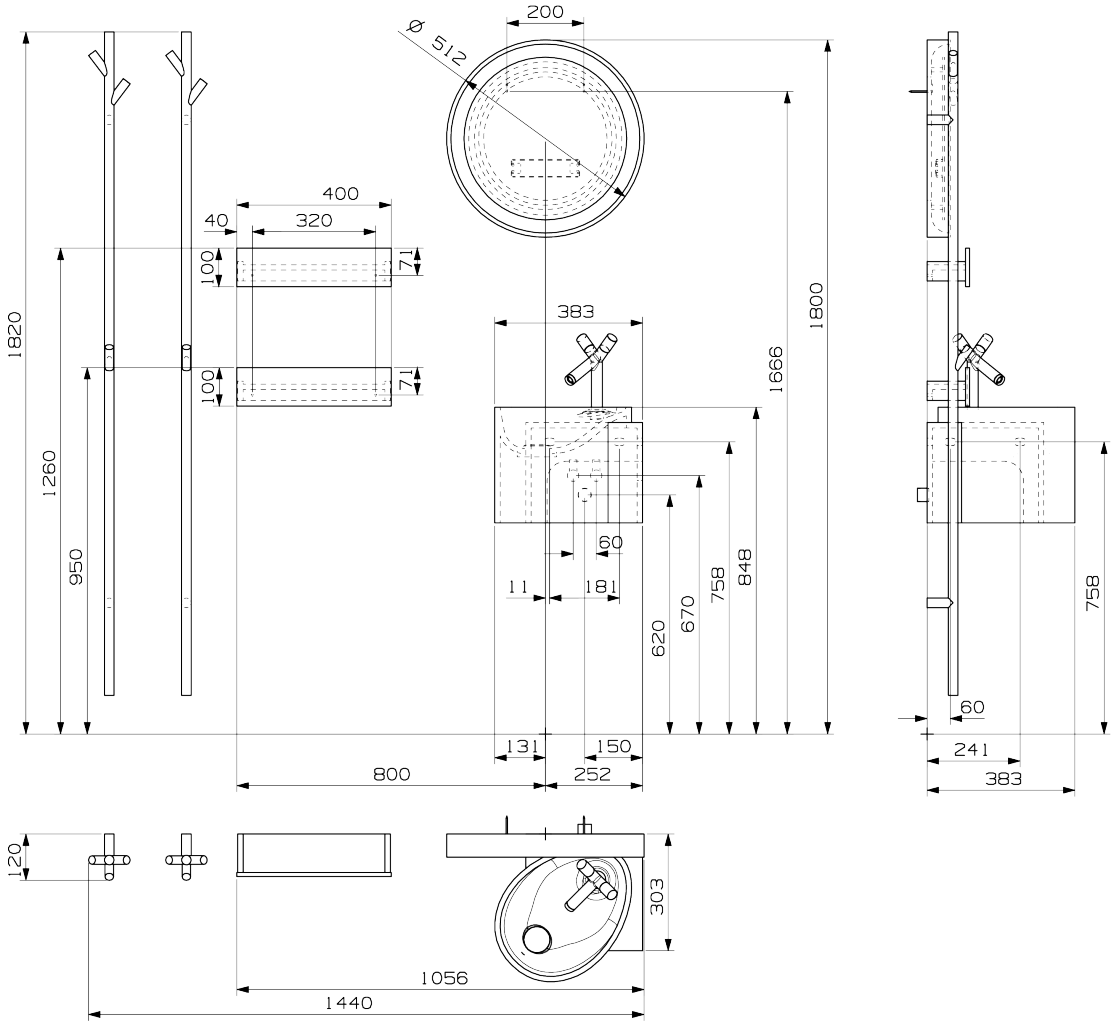

M 1:10

www.eumardesign.com

All drawings contain necessary measurements, which are subject to standard tolerances. They are stated in mm and are non-binding. Exact measurements, in particular of customized products, can only be taken from the finished product Information about tolerances can be found in our General Terms and Conditions (GTC) - www.eumar.ee/gtc In the interests of technical progress we reserve the right to introduce technical modifications.